# Measuring inserts for dial gauges
# Special steel with measuring ball
# Ø4mm

| | |
|---|---|
| **Product number:** | 1330110-4 |
| **EAN / GTIN:** | 4066918046086 |
| **Manufacturer number:** | 62040 |
| **Customs code:** | 90319000 |
| **Delivery method:** | Parcel delivery service |
| **Weight:** | 0.01kg |

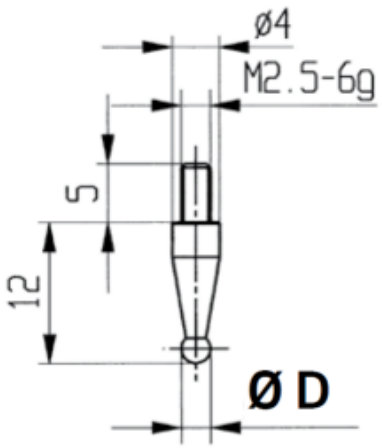


## Product description

- For dial gauges and comparator gauges
- Mounting thread M2.5

**Delivered in individual packages**

## Technical Data

| | |
|---|---|
| **Size:** | Ø4mm |
| **Article no.:** | 1330110-4 |
| **Brand:** | KÄFER |
| **Manufacturer number:** | 62040 |
| **Diameter:** | 4mm |
| **Weight:** | 0.01kg |