Probe extensions
for dial gauges and comparator gauges
65mm Ø4mm

Product number:	1330131
EAN / GTIN:	4066918046543
Manufacturer number:	62514
Customs code:	90319000
Delivery method:	Parcel delivery service
Weight:	0.01kg

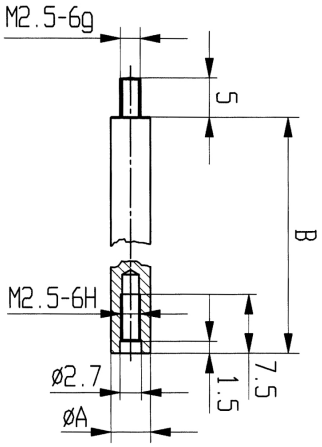

Product description

- Mounting thread M2.5

1330 1..: Ø 4mm
1330 2..: Ø 5mm

Delivered in individual packages

Technical Data

Size:	65mm Ø4mm
Article no.:	1330131
Brand:	KÄFER
Manufacturer number:	62514
Diameter:	4mm
Length:	65mm
Weight:	0.01kg